PLASTIC WASH BOTTLE W/ WIDE MOUTH - BTL-WW-8

APPROX WEIGHT: 0.55 lbs.
DOES NOT INCLUDE WEIGHT OF POWER OR PACKAGING!!!

*** ANY ADDITIONS, DELETIONS, OR OMISSIONS MUST BE CORRECTED ON THIS DRAWING AS THIS DRAWING WILL BE CONSIDERED ALL INCLUSIVE ***
ALL GRAPHICS PROVIDED ARE FOR REFERENCE ONLY. IF CERTAIN DIMENSIONS ARE CRITICAL PLEASE VERIFY THOSE DIMENSIONS WITH YOUR SALESPERSON

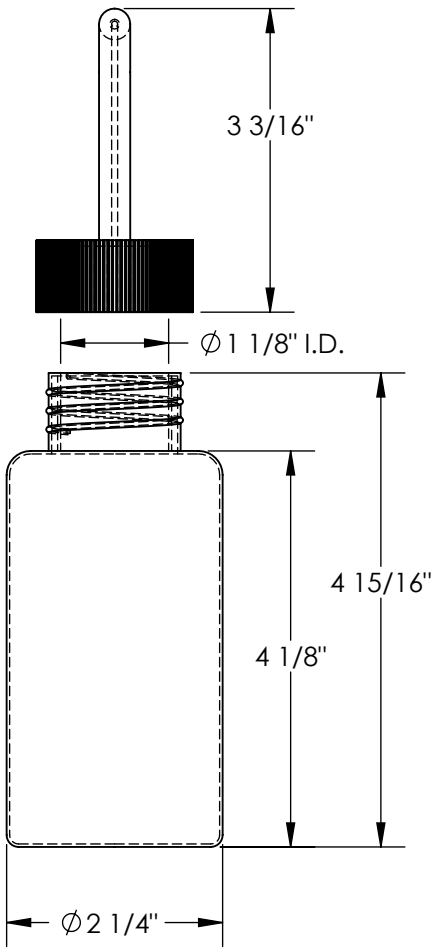

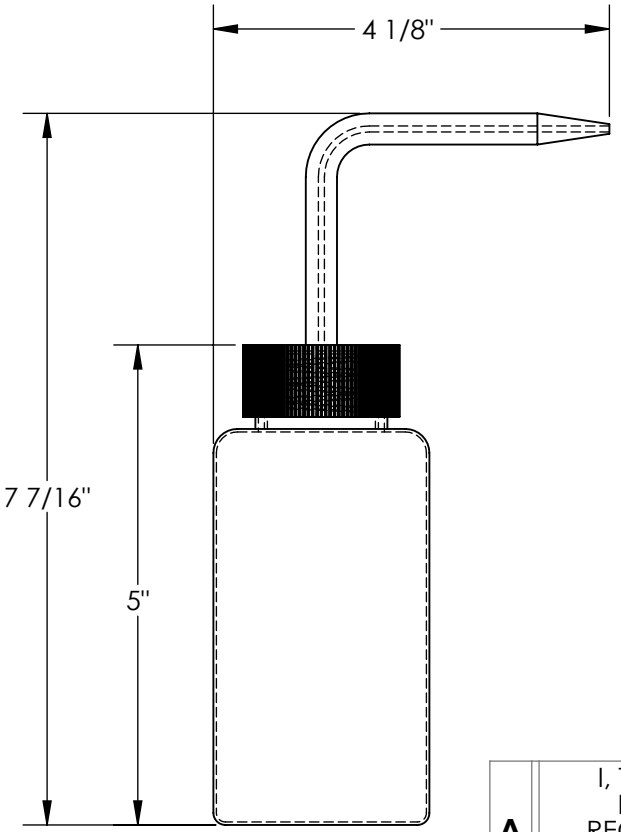

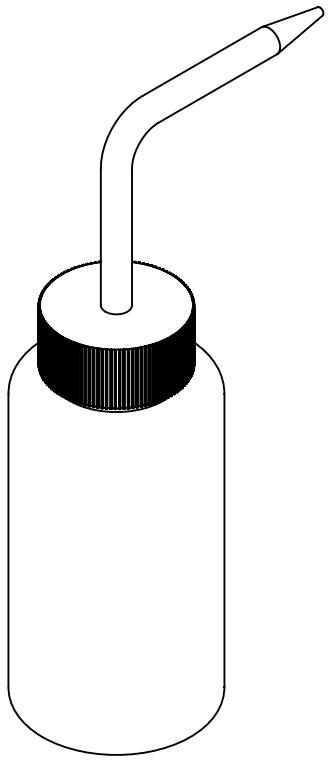

STANDARD FEATURES

MODEL NUMBER IS BTL-WW-8
BOTTLE DIAMETER IS Ø2 1/4"
BOTTLE LID IS Ø1 5/8"
HEIGHT IS 7 7/16"
MAX CAPACITY IS 8 OZ.
LID COLOR: WHITE

SPECIAL FEATURES

NONE

APPROVAL

I, THE UNDERSIGNED, AGREE THAT THE PRODUCT AS REPRESENTED SATISFIES DESIGN AND DIMENSION REQUIREMENTS. I ALSO ACKNOWLEDGE MY DUTY TO CONFIRM PRODUCT AND INSTALLATION COMPLIANCE WITH ALL APPLICABLE FEDERAL, STATE AND LOCAL REGULATIONS AND STANDARDS.

ALL SPECIAL UNITS ARE NON-RETURNABLE

[ ] As drawn [ ] As marked

Signed:_____ Date:_____

LEAD TIME WILL START UPON RECEIPT OF SIGNED APPROVAL DRAWING

DISTRIBUTOR'S NAME: VESTIL MANUFACTURING			P.O.# X
			W.O.# X
DRAWN BY: CRM	DATE: 04/25/2011		SALES: X
REFERENCE: X		SCALE: 1:2	FILE NAME: 30-007-977
QUOTED LEAD TIME: X	QUOTE # X		