ELECTRIC HYDRAULIC DOCKLEVELER - EH-710

APPROX WEIGHT: 2456 lbs.
DOES NOT INCLUDE WEIGHT OF POWER OR PACKAGING!!!

*** ANY ADDITIONS, DELETIONS, OR OMISSIONS MUST BE CORRECTED ON THIS DRAWING AS THIS DRAWING WILL BE CONSIDERED ALL INCLUSIVE ***
ALL GRAPHICS PROVIDED ARE FOR REFERENCE ONLY. IF CERTAIN DIMENSIONS ARE CRITICAL PLEASE VERIFY THOSE DIMENSIONS WITH YOUR SALESPERSON

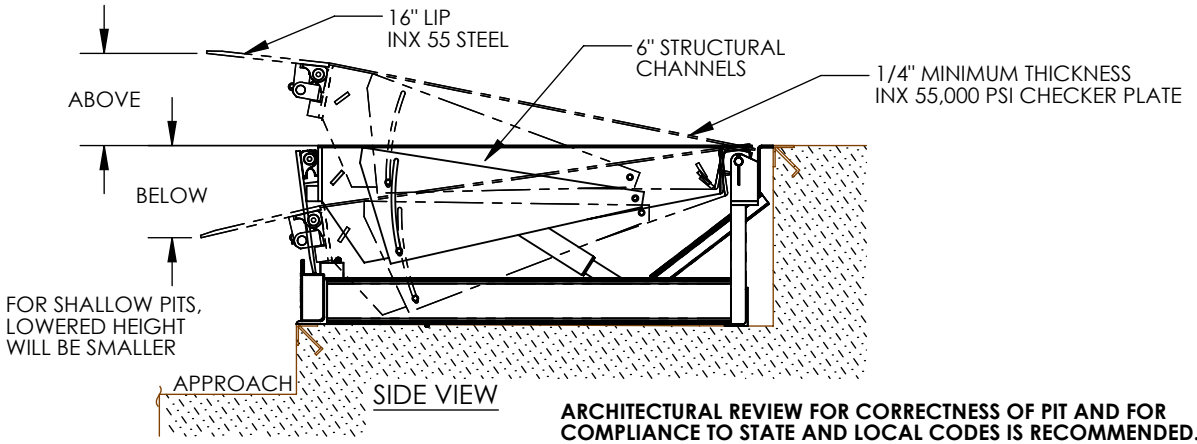

ARCHITECTURAL REVIEW FOR CORRECTNESS OF PIT AND FOR COMPLIANCE TO STATE AND LOCAL CODES IS RECOMMENDED.

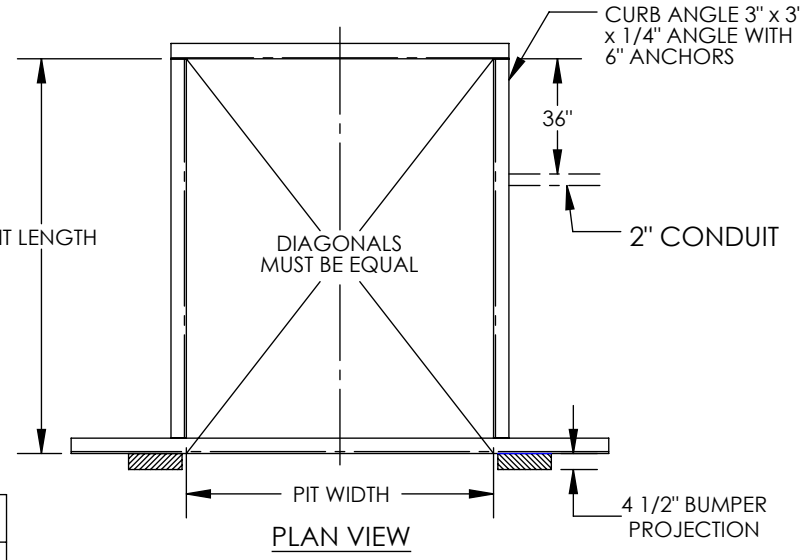

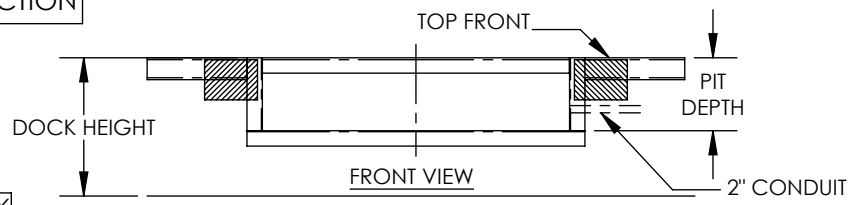

SEE DRAWING NUMBERS EH-1 THRU EH-4 FOR MORE INSTALLATION INFO

STANDARD FEATURES

DOCKEVELER MODEL NUMBER: EH-710
PIT WIDTH IS 86 INCHES
PIT LENGTH IS 110 INCHES
PIT DEPTH IS 24 INCHES AT FRONT, 23 3/4 INCHES AT BACK
DOCK HEIGHT IS 48 INCHES (48 INCHES STANDARD)
DOCKLEVELER CAPACITY (GROSS ROLLING LOAD) IS 20,000 LBS.
VERTICAL SERVICE RANGE IS 12 INCHES ABOVE AND 12 INCHES BELOW DOCK
INCLUDES (2) 1014-4.5 LAMINATED DOCK BUMPERS
SINGLE AXLE CAPACITY NOT TO EXCEED 70% OF LOAD

ALL STRUCTURAL STEEL CONSTRUCTION; WELDING MEETS AWS.
DESIGN, ENGINEERING, AND FABRICATION COMPLIES WITH
D.O.C. COMM. STD. CS 202-56, OSHA, & ANSI MH14.1-1984
-REFER TO THE UNIT'S ELECTRICAL DIAGRAM FOR ELECTRICAL SERVICE REQUIREMENTS.
- INSTALL TO MEET ALL APPLICABLE STATE & LOCAL CODES FOR YOUR AREA!
-NOTE: ONE 18/2 STD AND 14/3 (FOR 1 PHASE) OR 14/4 (FOR 3 PHASE) STD CABLE (OR EQUIVALENT) MUST BE PROVIDED BY THE INSTALLER IN ORDER TO COMPLETE THE INSTALLATION.

PLEASE CIRCLE SPECIFICATIONS:

NEW	(PIT) CONSTRUCTION
EXISTING	(PIT) CONSTRUCTION

FOR INTERNAL USE ONLY PROJECT SIGN OFF	
SALES	
ENG.	
FAB.	
POWER	

SPECIAL FEATURES

NONE

****SPECIAL UNITS ARE NON-RETURNABLE**

PLEASE CIRCLE SPECIFICATIONS:

POWER	AC	* DC	* AIR/OIL	
MOTOR VOLTAGE	115	208	230	460
DEDICATED CIRCUIT REQUIRED				
MOTOR PHASE	SINGLE	THREE		
CONTROL	HAND	* FOOT		
~ ALL BATTERY CHARGERS ARE 115V AC ~				
* BATTERY CHRG.	REMOTE	ON-BOARD		
* CHRG. INDICATOR	YES	NO		

** AVAILABLE AT ADDITIONAL COST*

APPROVAL

I, THE UNDERSIGNED, AGREE THAT THE PRODUCT AS REPRESENTED SATISFIES DESIGN AND DIMENSION REQUIREMENTS. I ALSO ACKNOWLEDGE MY DUTY TO CONFIRM PRODUCT AND INSTALLATION COMPLIANCE WITH ALL APPLICABLE FEDERAL, STATE AND LOCAL REGULATIONS AND STANDARDS.

ALL SPECIAL UNITS ARE NON-RETURNABLE

[ ] As drawn [ ] As marked

Signed:_____ Date:_____

LEAD TIME WILL START UPON RECEIPT OF SIGNED APPROVAL DRAWING

DISTRIBUTOR'S NAME: VESTIL MANUFACTURING			P.O.# X
			W.O.# X
DRAWN BY: TJM	DATE: 07/15/11		SALES: X
REFERENCE: X		SCALE: NTS	FILE NAME: 06-007-042
QUOTED LEAD TIME: X	QUOTE # X		