HYDRAULIC DRUM CRUSHER/ COMPACTOR- HDC-905-IDC/230V

APPROX WEIGHT: 1075.13 lbs.
DOES NOT INCLUDE WEIGHT OF POWER OR PACKAGING!!!

*** ANY ADDITIONS, DELETIONS, OR OMISSIONS MUST BE CORRECTED ON THIS DRAWING AS THIS DRAWING WILL BE CONSIDERED ALL INCLUSIVE ***
ALL GRAPHICS PROVIDED ARE FOR REFERENCE ONLY. IF CERTAIN DIMENSIONS ARE CRITICAL PLEASE VERIFY THOSE DIMENSIONS WITH YOUR SALESPERSON

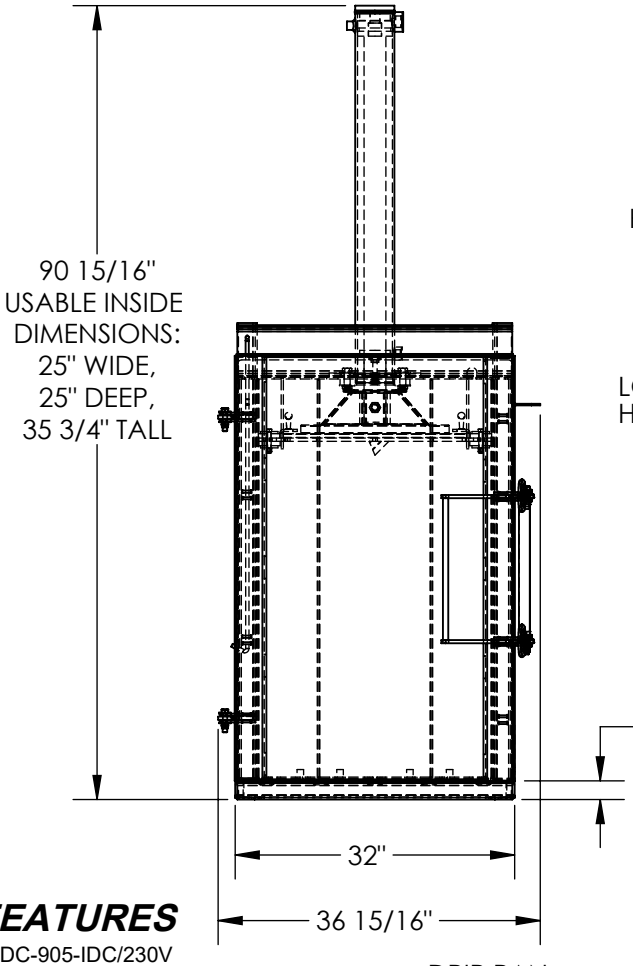

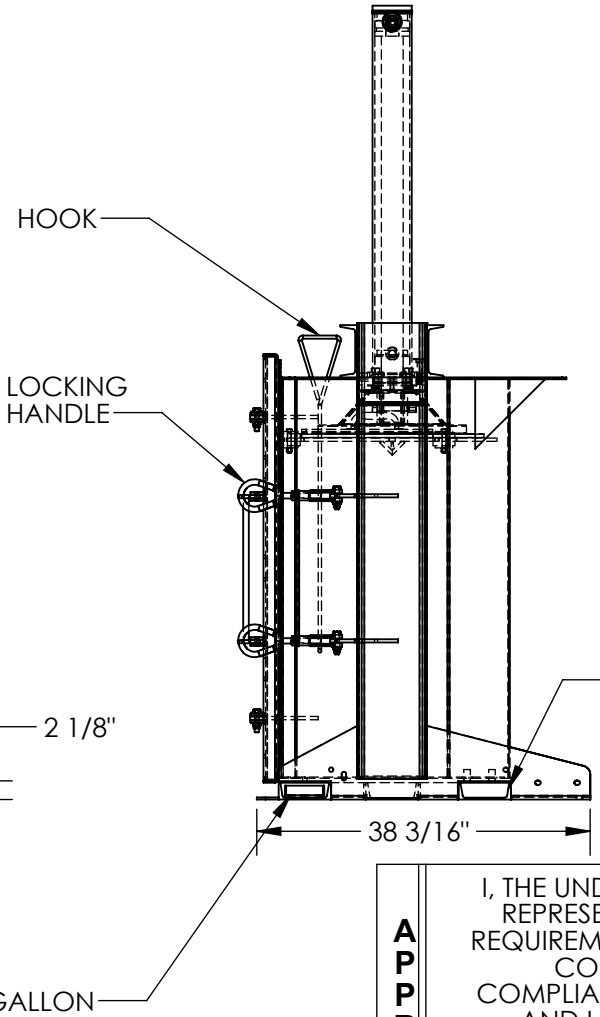

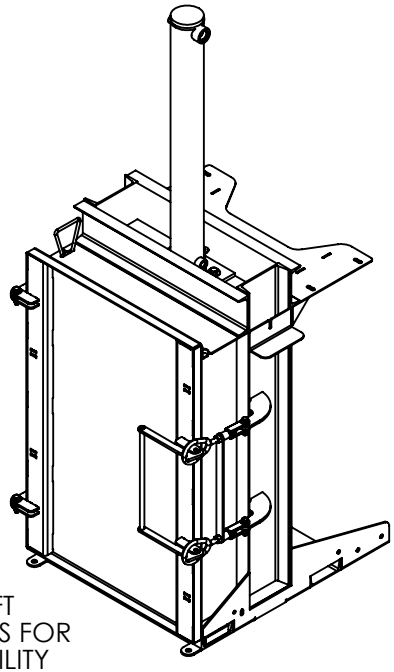

DIMENSION TOLERANCE ± 1/4"

STANDARD FEATURES

MODEL NUMBER IS HDC-905-IDC/230V
DRUM CRUSHER AND COMPACTOR
STD. 55 GAL. DRUM CAPACITY
POSITIVE DRUM POSITIONING
DRUM HEAD PIERCER TO RELEASE
INTERNAL DRUM PRESSURE
6.5 HP, THREE PHASE (PREWIRED FOR 230V)
2-SPEED HYD. GEAR PUMP -- 11 GPM
4" DIA. PISTON CYLINDER W/ 36"
OF STROKE --FULL CYCLE TIME OF 25 SECONDS
(CRUSH AND RETRACT)
HYD.SYSTEM PRESS. RATING: 3000 PSI,
W/ HYD. SYSTEM RELIEF VALVE
38,000 LBS. OF CRUSHING FORCE --
REDUCES STEEL DRUMS TO ONLY 6" HIGH
24V CONTROL CIRCUIT, WITH:
ON/OFF KEY SWITCH;
CYCLE START BUTTON;
CRUSH / COMPACT SELECTOR SWITCH;
TWO PRESSURE SWITCHES --
HIGH PRESSURE FOR CRUSHING,
LOW PRESSURE FOR COMPACTING
MATERIALS INSIDE A DRUM;
DOOR INTERLOCK SWITCH
DURABLE LIQUID PAINT BLUE FINISH

STANDARD POWER UP:
230 VOLT, 3-PHASE

SPECIAL FEATURES

NONE

APPROVAL

I, THE UNDERSIGNED, AGREE THAT THE PRODUCT AS REPRESENTED SATISFIES DESIGN AND DIMENSION REQUIREMENTS. I ALSO ACKNOWLEDGE MY DUTY TO CONFIRM PRODUCT AND INSTALLATION COMPLIANCE WITH ALL APPLICABLE FEDERAL, STATE AND LOCAL REGULATIONS AND STANDARDS.

UNITS REQUIRING APPROVAL DRAWINGS OR MODIFIED ARE NON-RETURNABLE

[ ] As drawn [ ] As marked

Signed:_____ Date:_____

Printed Name:_____

LEAD TIME WILL START UPON RECEIPT OF SIGNED APPROVAL DRAWING

DISTRIBUTOR'S NAME: VESTIL MANUFACTURING		P.O.# X
		W.O.# X
DRAWN BY: TAW	DATE: 8/8/2016	SALES: X
REFERENCE: X	SCALE: 1:22	FILE NAME: 22-007-017-002
QUOTED LEAD TIME: X	QUOTE # X	