STANDARD SLOPE LADDER, 5-STEP, GRIP STRUT - LAD-R-18-5-G

APPROX WEIGHT: 93.27 lbs.
DOES NOT INCLUDE WEIGHT OF POWER OR PACKAGING!!!

*** ANY ADDITIONS, DELETIONS, OR OMISSIONS MUST BE CORRECTED ON THIS DRAWING AS THIS DRAWING WILL BE CONSIDERED ALL INCLUSIVE ***
ALL GRAPHICS PROVIDED ARE FOR REFERENCE ONLY. IF CERTAIN DIMENSIONS ARE CRITICAL PLEASE VERIFY THOSE DIMENSIONS WITH YOUR SALESPERSON

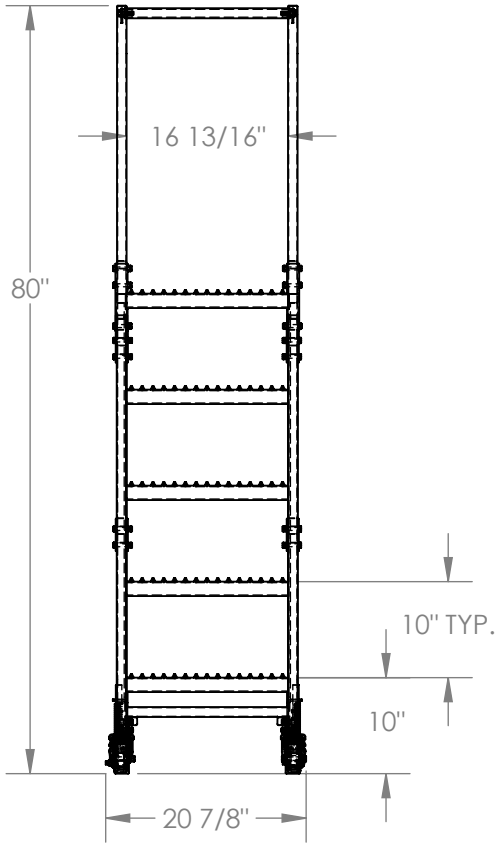

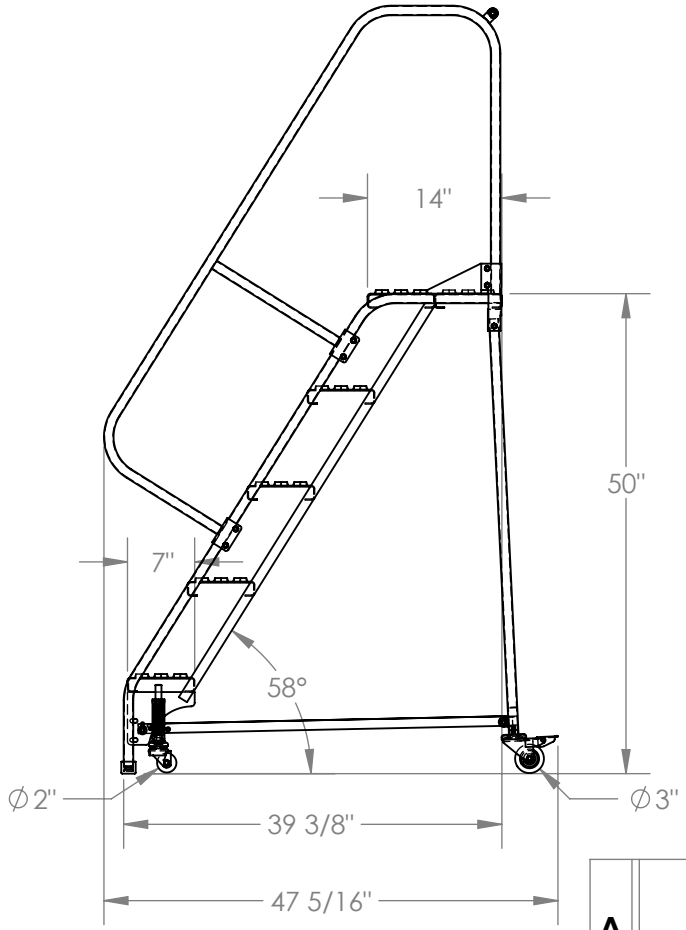

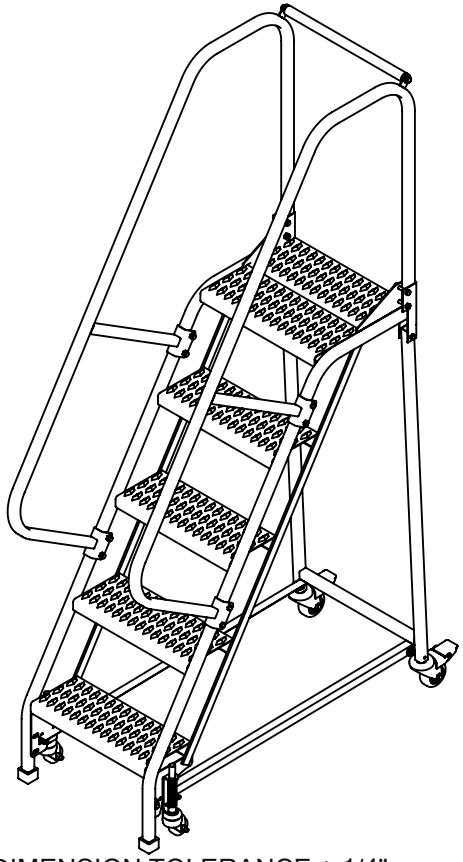

DIMENSION TOLERANCE ± 1/4"

STANDARD FEATURES

MODEL NUMBER IS LAD-R-18-5-G
OVERALL WIDTH IS 20 7/8"
USABLE WIDTH IS 16 13/16"
OVERALL LENGTH IS 47 5/16"
USABLE LENGTH IS 39 3/8"
OVERALL HEIGHT IS 80"
PLATFORM HEIGHT IS 50"
COLOR IS VESTIL BLUE
STEP TYPE IS GRIP STRUT
CLIMB ANGLE IS 58°
STEP DEPTH IS 7"
PLATFORM DEPTH IS 14"
MAX CAPACITY IS 350 LBS
DIRECTIONAL SPRING-LOADED SWIVEL CASTERS
FRONT WHEEL SIZE IS Ø 2"
REAR WHEEL SIZE IS Ø 3"

NOTE

SOME ASSEMBLY REQUIRED
TOOL TRAY SOLD SEPARATELY

SPECIAL FEATURES

NONE

APPROVAL

I, THE UNDERSIGNED, AGREE THAT THE PRODUCT AS REPRESENTED SATISFIES DESIGN AND DIMENSION REQUIREMENTS. I ALSO ACKNOWLEDGE MY DUTY TO CONFIRM PRODUCT AND INSTALLATION COMPLIANCE WITH ALL APPLICABLE FEDERAL, STATE AND LOCAL REGULATIONS AND STANDARDS.

ALL SPECIAL UNITS ARE NON-RETURNABLE

[ ] As drawn [ ] As marked

Signed:_____Date:_____

LEAD TIME WILL START UPON RECEIPT OF SIGNED APPROVAL DRAWING

FOR INTERNAL USE ONLY PROJECT SIGN OFF	
SALES	
ENG.	
FAB.	
POWER	

DISTRIBUTOR'S NAME: VESTIL MANUFACTURING			P.O.# X
			W.O.# X
DRAWN BY: B.NOTHNAGEL	DATE: 01/28/2015		SALES: X
REFERENCE: X		SCALE: 1:20	FILE NAME: 44-007-451
QUOTED LEAD TIME: X		QUOTE # X	