5-STEP, 58° ROLL-A-FOLD LADDER, PERFORATED - LAD-RF-5-P

APPROX WEIGHT: 105.37 lbs.
DOES NOT INCLUDE WEIGHT OF POWER OR PACKAGING!!!

*** ANY ADDITIONS, DELETIONS, OR OMISSIONS MUST BE CORRECTED ON THIS DRAWING AS THIS DRAWING WILL BE CONSIDERED ALL INCLUSIVE ***
ALL GRAPHICS PROVIDED ARE FOR REFERENCE ONLY. IF CERTAIN DIMENSIONS ARE CRITICAL PLEASE VERIFY THOSE DIMENSIONS WITH YOUR SALESPERSON

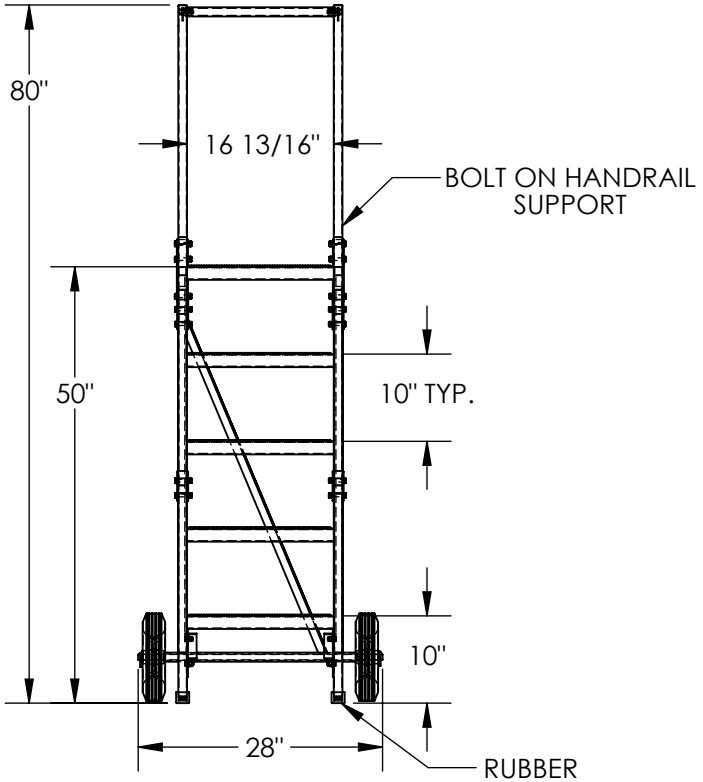

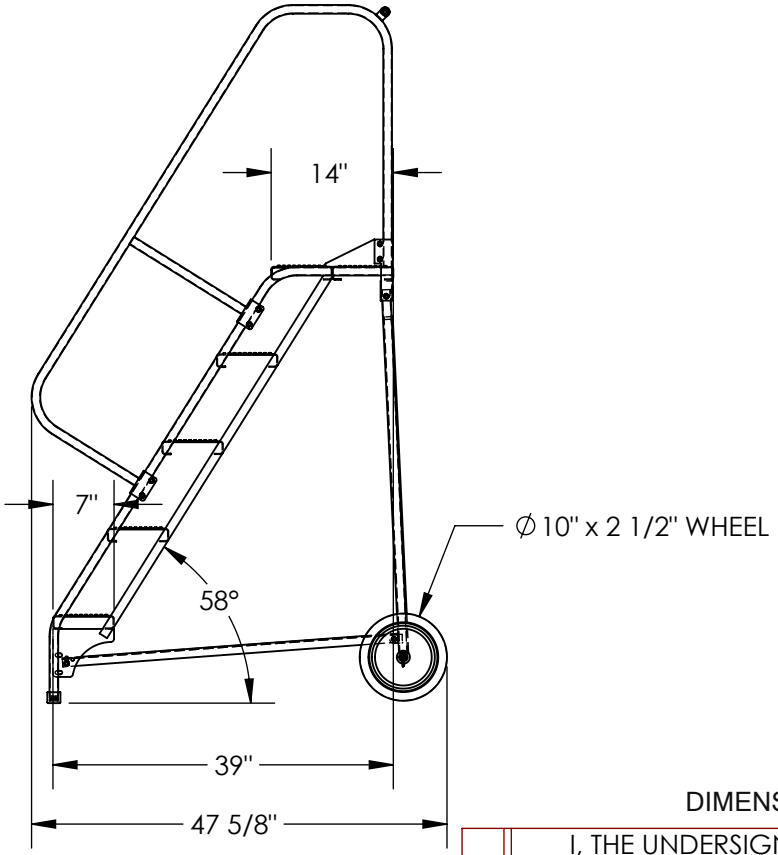

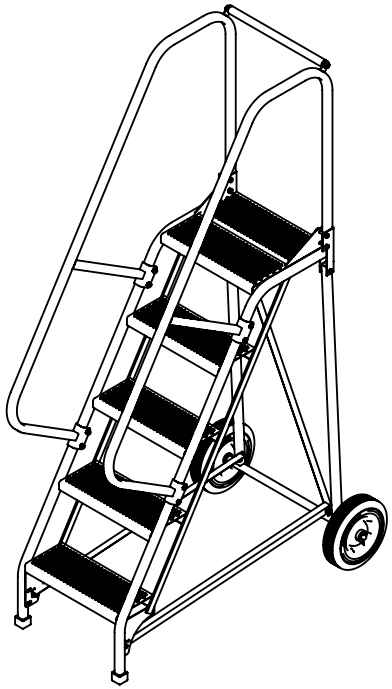

DIMENSION TOLERANCE ± 1/4"

STANDARD FEATURES

MODEL NUMBER IS LAD-RF-5-P
OVERALL WIDTH IS 28"
USABLE WIDTH IS 16 13/16"
OVERALL LENGTH IS 47 5/8"
USABLE LENGTH IS 39"
OVERALL HEIGHT IS 80"
PLATFORM HEIGHT IS 50"
STEP DEPTH IS 7"
PLATFORM DEPTH IS 14"
CLIMB ANGLE IS 58°
COLOR IS VESTIL BLUE
STEP STYLE IS PERFORATED
MAX CAPACITY IS 350 LBS

NOTE

SOME ASSEMBLY REQUIRED
TOOL TRAY SOLD SEPARATELY

SPECIAL FEATURES

NONE

APPROVAL

I, THE UNDERSIGNED, AGREE THAT THE PRODUCT AS REPRESENTED SATISFIES DESIGN AND DIMENSION REQUIREMENTS. I ALSO ACKNOWLEDGE MY DUTY TO CONFIRM PRODUCT AND INSTALLATION COMPLIANCE WITH ALL APPLICABLE FEDERAL, STATE AND LOCAL REGULATIONS AND STANDARDS.

ALL SPECIAL UNITS ARE NON-RETURNABLE

[ ] As drawn [ ] As marked

Signed:_____ Date:_____

LEAD TIME WILL START UPON RECEIPT OF SIGNED APPROVAL DRAWING

FOR INTERNAL USE ONLY PROJECT SIGN OFF	
SALES	
ENG.	
FAB.	
POWER	

DISTRIBUTOR'S NAME: VESTIL MANUFACTURING			P.O.# X
			W.O.# X
DRAWN BY: B.NOTHNAGEL	DATE: 11/13/2014		SALES: X
REFERENCE: X		SCALE: 1:22	FILE NAME: 44-007-178
QUOTED LEAD TIME: X	QUOTE # X		