ROUND METAL CAN WITH LID - MRC-64

APPROX WEIGHT: 7.4 OZ.
DOES NOT INCLUDE WEIGHT OF POWER OR PACKAGING!!!

*** ANY ADDITIONS, DELETIONS, OR OMISSIONS MUST BE CORRECTED ON THIS DRAWING AS THIS DRAWING WILL BE CONSIDERED ALL INCLUSIVE ***
ALL GRAPHICS PROVIDED ARE FOR REFERENCE ONLY. IF CERTAIN DIMENSIONS ARE CRITICAL PLEASE VERIFY THOSE DIMENSIONS WITH YOUR SALESPERSON

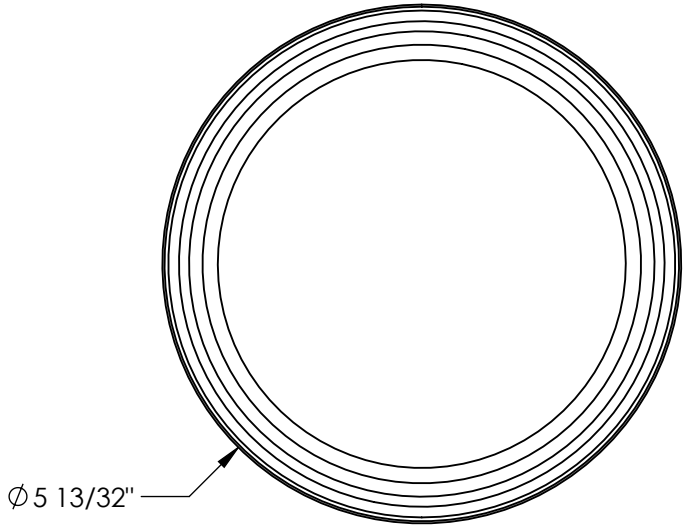

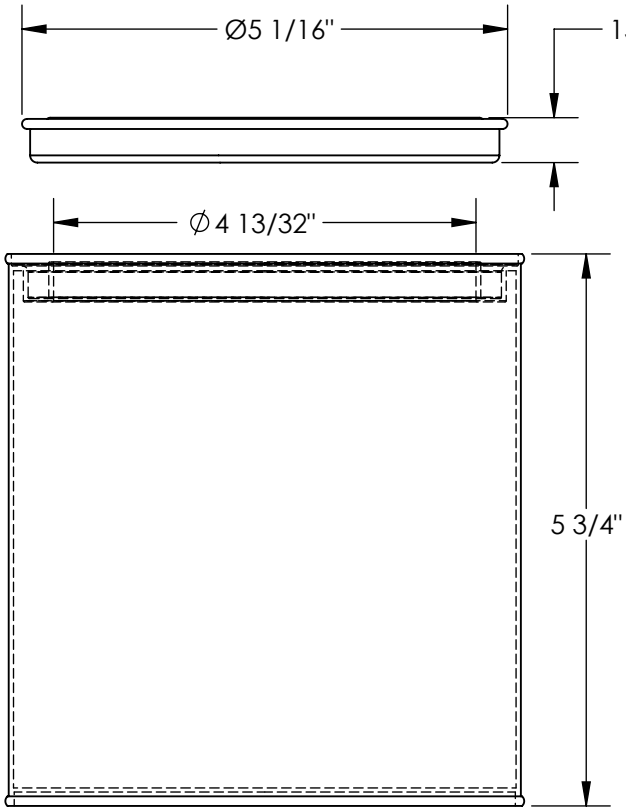

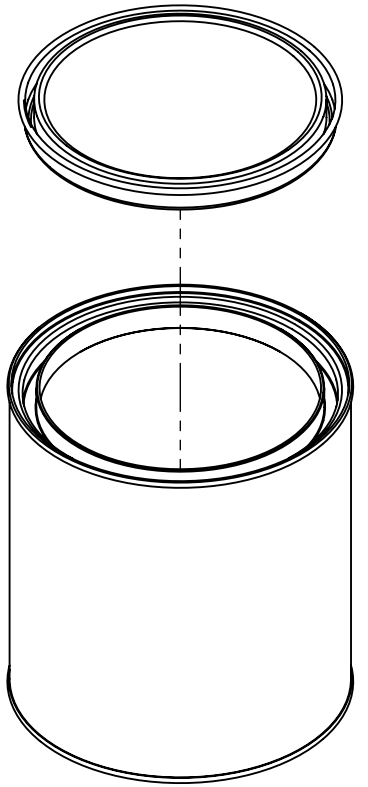

3D VIEW
SCALE 1:3

STANDARD FEATURES

MODEL NUMBER IS MRC-64
OVERALL DIAMETER IS: 5 13/32"
OVERALL HEIGHT IS: 5 3/4"
MAX CAPACITY IS: 64 OUNCES

SPECIAL FEATURES

NONE

APPROVAL

I, THE UNDERSIGNED, AGREE THAT THE PRODUCT AS REPRESENTED SATISFIES DESIGN AND DIMENSION REQUIREMENTS. I ALSO ACKNOWLEDGE MY DUTY TO CONFIRM PRODUCT AND INSTALLATION COMPLIANCE WITH ALL APPLICABLE FEDERAL, STATE AND LOCAL REGULATIONS AND STANDARDS.

ALL SPECIAL UNITS ARE NON-RETURNABLE

[ ] As drawn [ ] As marked

Signed:_____ Date:_____

LEAD TIME WILL START UPON RECEIPT OF SIGNED APPROVAL DRAWING

DISTRIBUTOR'S NAME: VESTIL MANUFACTURING			P.O.# X
			W.O.# X
DRAWN BY: T. MOORE	DATE: 03/31/11		SALES: X
REFERENCE: X		SCALE: 1:2	FILE NAME: 30-007-885-001
QUOTED LEAD TIME: X	QUOTE # X		