VESTIL MANUFACTURING CORP.
2999 N. Wayne St., Angola, IN 46703
Ph: 260-665-7586 · Fax: 260-665-1339
E-mail: sales@vestil.com · Website: www.vestil.com

OWNER'S MANUAL

MODEL HPC-400 HYDRAULIC PAIL CRUSHER

Serial number _____

Assembly / Installation Instructions ……..… 2
Operation Instructions …….…… 3-4
Routine Maintenance & Safety Checks …… 5
Inspection & Testing Procedures (hoists) ...…….…. 6
Exploded Structural Parts Drawing & BOM ……... 7-8
Electrical & Hydraulic Diagrams & BOM ……. 9-12
Power Unit's Operation ……...…..……... 13
Troubleshooting ……...…… 14
Safety Label Identification 15
Warranty …….……..…. 16

IMPORTANT NOTES, WARNINGS AND SAFETY INSTRUCTIONS

Ensure that all employees understand and follow the following.

- ☝ **Failure to read and understand this owner's manual before using or servicing the pail crusher constitutes a misuse of the product.** All persons who will install, use, or care for this product must be familiar with this material.
- o The crushing platen must be secured against dropping before any work is performed on the hydraulic system.
- o Ensure that all information / safety / warning labels stay in place and remain legible.
- o Do not use the pail crusher if any damage or unusual noise is observed.
- o Always verify that the cabinet door is securely closed before the crusher is put into operation.
- o The pail crusher is intended for crushing steel pails (standard 5-gallon and smaller) in non-classified indoor environments.
- o Do not use brake fluid or jack oils in the hydraulic system. If oil is needed, use an anti-wear hydraulic oil with a viscosity grade of 150 SUS at 100°F, (ISO 32 cSt @ 40°C), or Dexron transmission fluid.
- o Contact the manufacturer for any needed MSDS information.
- ♦ Do not perform any modifications to the pail crusher without the manufacturer's approval. Failure to receive authorization for changes to the equipment could void the warranty.
- ♦ Maintenance and repairs are to be done only by personnel qualified to perform the required work. Consideration will not be given for warranty repair charges without prior written authorization by the manufacturer.

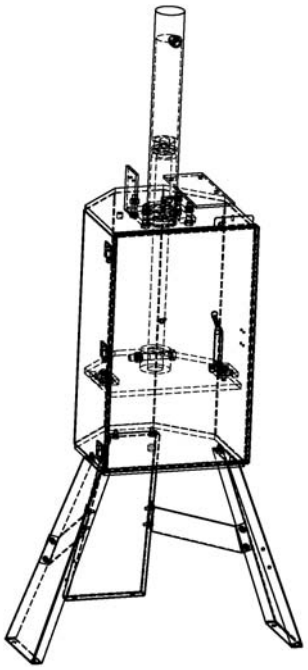

WHEN ORDERING REPLACEMENT PARTS:

We take pride in using quality parts on the equipment we manufacture. We are not responsible for equipment problems resulting from the use of unapproved replacement parts.

To order replacement or spare parts for this equipment, contact the factory.

In any communication with the factory please be prepared to provide the machine's serial number, which is indicated on the machine dataplate.

RECEIVING INSTRUCTIONS

It is possible that this product could incur damage during transit.

Inspect the unit closely when it arrives. *If you see evidence of damage or rough handling to either the packaging or to the product when it is being unloaded, immediately make a note of it on the Bill Of Lading!*

It is important that you remove the product's packaging upon its arrival to ensure that there is no concealed damage or to enable a timely claim with the carrier for freight damage.

Also verify that the product and its specifications are as ordered.

INSTALLATION INSTRUCTIONS – HPC-400

Review this entire page before installing the pail crusher.

Consult the factory in the event there are any questions or problems at the time of installation, or for information regarding optional features not covered by the owner's manual.

The pail crusher must be removed from the shipping wood and securely anchored to a concrete surface before use!

- Modifications or additions to the pail crusher without prior manufacturer's authorization may void the crusher's warranty.
- The installation of this machine must be made so that it complies with all the regulations applicable to the machine and its location. The end-user must verify that the supplied equipment is installed so it will be suited to the environment in which it will be used.
- Installation must be performed by suitably trained personnel with access to the appropriate equipment. The electrical aspects of the installation should be performed by an electrician.

For a typical installation of a standard pail crusher, you will need the following:

1. A fork truck or hoisting means to unload the pail crusher from the freight truck and set it into place.
2. A smooth, level, and adequately strong concrete surface on which to mount the pail crusher.
3. Concrete anchors, a masonry drill, a masonry bit, and hand tools. Consult the building's architect or facility engineer to determine the best size and type of hardware with which to anchor the machine to the floor.
4. An appropriate power supply circuit and electrical disconnect matching the motor voltage and current requirements. Refer to the machine's dataplate, to the labels on the control enclosure, and to the electrical section in this manual for more information. The end-user is responsible for supplying the branch circuit's required ground fault and short-circuit protection. (Standard units have a 115V motor with overload protection provided by a built-in thermostat, and have an 8' long power cord with a molded 3-prong plug.)

To install a standard pail crusher:

1. Move the pail crusher to the location at which it is intended to be operated. Use care to avoid damaging the power unit's electrical and hydraulic components.
   Caution: Once it is unbanded from the skid, the pail crusher will be top-heavy and can fall over.
   Note: The pail crusher's legs can be removed to allow the pail crusher to be used on top of a heavy work table, countertop, work bench, etc. If the legs are removed, the unit does not need to be anchored.
2. Anchor the frame to the floor (3/8" max.) through the holes located in the bottom flange of each leg.
3. If applicable, make permanent connection to the power supply, using an appropriate wiring method.
4. Operate the pail crusher through several full crush cycles. Verify that the crush platen's upper travel limit switch and the door limit switch function properly.
5. Check the hydraulic oil level. It should be filled to within about 1" of the reservoir's fill hole. If oil is needed, use an anti-wear hydraulic oil with a viscosity grade of 150 SUS at 100°F (ISO 32 at 40°C) or a non-synthetic automatic transmission fluid.
6. Clean up any debris or spilled oil, and verify that all of the information/safety/warning labels are in good condition.

OPERATION INSTRUCTIONS – HPC-400

o *Ensure that all employees involved in the operation of this crusher understand and follow these instructions!*

The standard model pail crusher is suitable for use indoors in most non-classified industrial and commercial locations. It is intended to be used to crush empty metal and fiber pails measuring up to 17½" high and 12½" in diameter.

[Notes re: applications involving static, temperature (esp. extremes), washdown, classified areas, etc.?]

Loading:

Warning: Do not attempt to crush sealed pails or pails that are not completely empty.

Note: The original contents of the pail must be taken into account to ensure that a hazardous or unhealthy condition will not be created (from airborne dust and vapors, etc.) when it is crushed.

Place an empty, unsealed pail on the floor of the cabinet. Center the pail so that there is a gap all the way around the pail to allow for the pail's diameter to increase as it crushes.

Operation:

Warning: The cabinet door must be closed and securely latched before cycling. Injury to personnel or permanent damage to the pail crusher could result from operating it with the cabinet door unsecured.

Caution: Keep personnel away from the front of the machine when it is in operation.

Press and release the "CYCLE START" pushbutton. The motor will turn on and the crushing platen will lower to crush the pail. When the pail is flattened, the platen will automatically raise back to the top of the cabinet and the crusher will turn off.

Open the door and remove the crushed pail.

Warning: Do not attempt to open the cabinet door when the crusher is in operation.

Caution: Never use the pail crusher if any damage or unusual noise is observed, if it is in need of repairs, or if it seems to be malfunctioning. Notify your supervisor or maintenance personnel if you notice anything out of the ordinary.

Ensure that all information/safety/warning labels stay in place and are legible. Refer to the labels page in this manual.

ROUTINE MAINTENANCE & SAFETY CHECKS – HPC-400

- *Warning: Care should be taken to identify all potential hazards and comply with applicable safety procedures before beginning work.*
- *Warning: Fully lower the crushing platen and remove all hydraulic pressure before beginning any work on the hydraulic system.*
- *Only qualified individuals trained to understand mechanical devices and their associated electrical and hydraulic circuits should attempt troubleshooting and repair of this equipment*

(A) Inspect daily for:

1.) Frayed or damaged wires.
2.) Oil leaks.
3.) Pinched or chafed hoses.
4.) Damage or structural deformation to the cabinet, legs, or door latching mechanism.
5.) Unusual noise or binding, or evidence thereof.
6.) Proper functioning of the upper travel and door switches.

(B) Inspect monthly for:

1.) The hydraulic fluid level. It should be maintained about 1”-1½” below the reservoir’s fill hole with the crushing platen in the fully raised position. See below for the hydraulic oil specification.
2.) Worn or damaged hydraulic hoses and electrical wires.
3.) Bending of the crushing platen’s hydraulic cylinder rod.
4.) The integrity of the legs’ anchor bolts, and for cracks in the concrete around them.
5.) Condition and tightness of the pushbuttons.
6.) Unusual noises or movement during operation.
7.) All the information/safety/warning labels being in place and in good condition.
8.) The need to clean off dirt and debris.

The oil should be changed if the oil darkens, becomes gritty, or turns a milky color (indicating the presence of water). Replace with an anti-wear hydraulic oil with a viscosity grade of 150 SUS at 100°F, (ISO 32 at 40°C). Ex: AW 32 or HO 150 hydraulic oil, or a non-synthetic transmission fluid such as Dexron III. You may use a synthetic transmission fluid if you flush the system with the synthetic fluid before filling the reservoir.

EXPLODED PARTS VIEW & BOM -- HPC-400

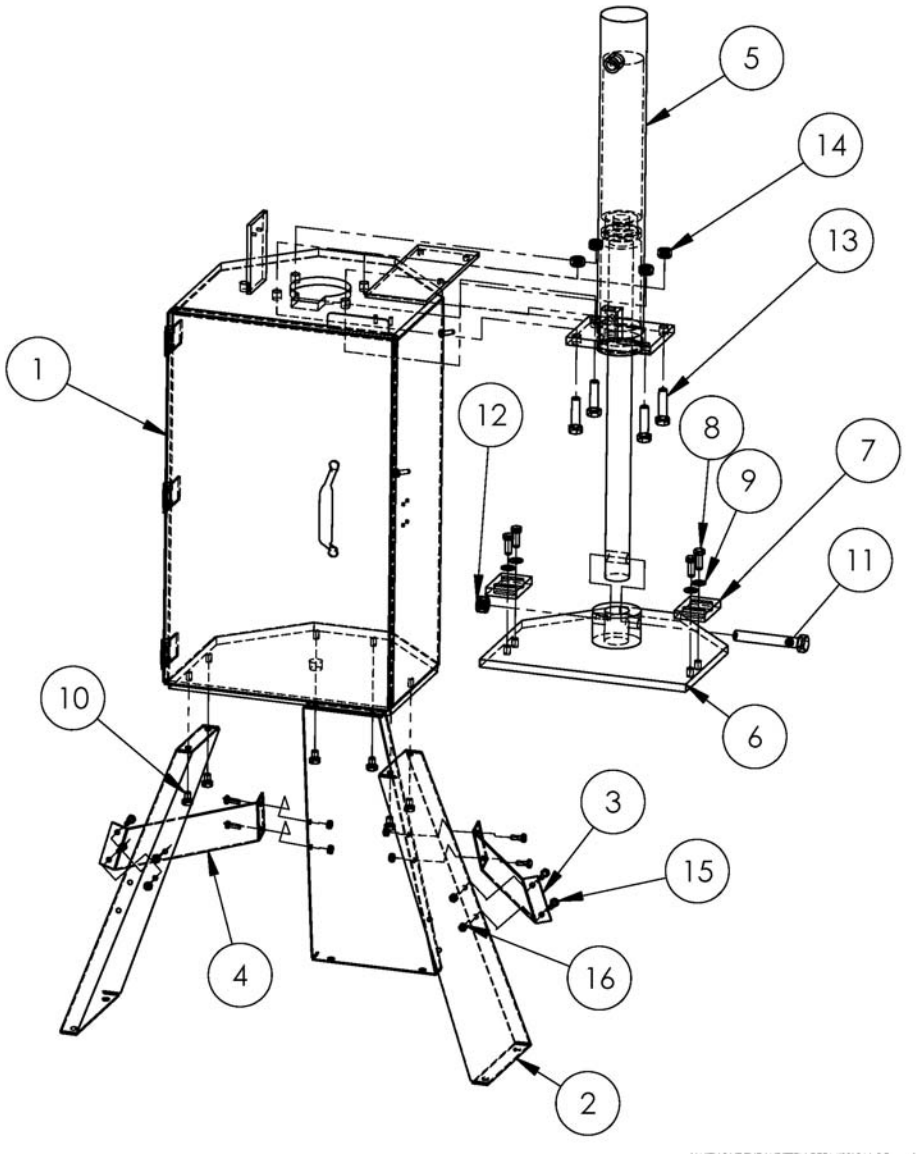

Item no.	Part number	Description	Qty.
1	22-514-013	Sub-assembly, frame and door	1
2	22-014-037	Leg, frame, formed	3
3	22-514-015	Weldment, leg brace, frame, right	1
4	22-514-016	Weldment, leg brace, frame, left	1
5	22-021-006	Cylinder, 2½" x 18" (1½" rod)	1
6	22-514-014	Weldment, frame, push plate	1
7	22-01-022	Bracket, guide, push plate	2
8	A/L	Screw, hex head, 3/8"16 UNC x 1" long	4
9	A/L	Washer, flat, 3/8" ID	4
10	A/L	Bolt, hex head, 3/8"-16 UNC x 1½" long	6
11	A/L	Bolt, hex head, 5/8"-11 UNC x 4¼" long	1
12	A/L	Nut, hex, 5/8"-11 UNC	1
13	A/L	Bolt, hex head, 1/2"-13 UNC x 1¼" long	4
14	A/L	Nut, hex, 1/2"-13 UNC	4
15	A/L	Bolt, hex head, 1/4"-20 UNC x ¾" long	8
16	A/L	Nut, hex, 1/4"-20 UNC	8

MOTOR & TRANSFORMER CONNECTION DIAGRAMS

CAUTION! *If the motor voltage is changed, the wire on the control transformer's primary wire has to be changed to match the new motor voltage also.*

MOTOR LEAD CONNECTION DIAGRAM FOR ALL
.5HP, .75HP AND 3HP SINGLE-PHASE MOTORS AND FOR
ALL 2HP, 5.5HP, AND 6.5HP THREE-PHASE MOTORS

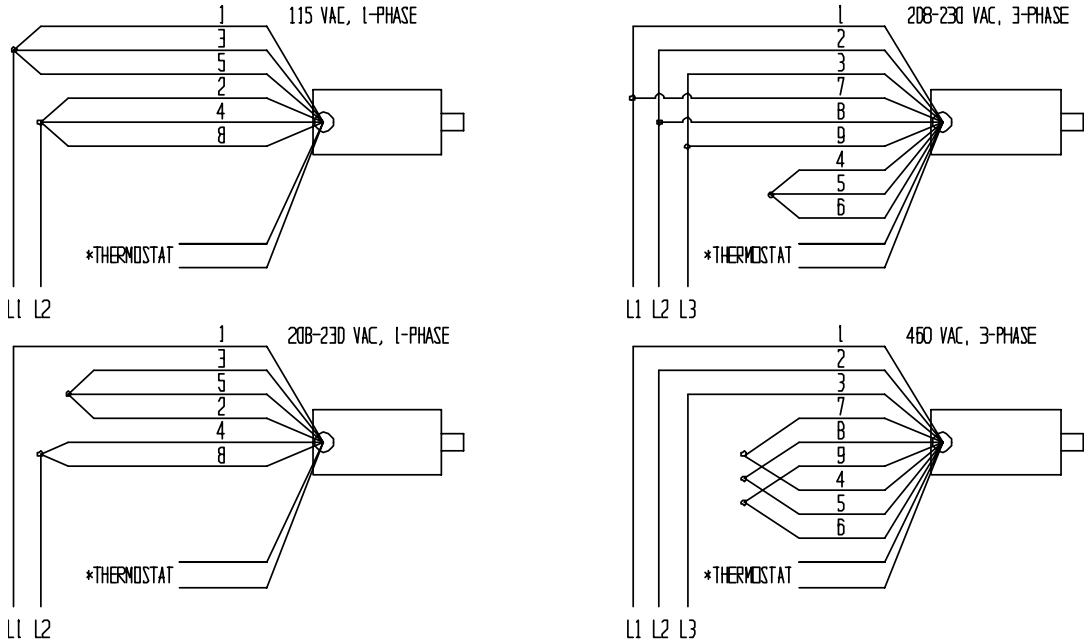

* The two thermostat leads go to: 1) the grounded side of the transformer secondary, and; 2) the motor relay coil, in either order.

BE SURE ALL POWER IS OFF BEFORE ATTEMPTING TO WORK ON THIS EQUIPMENT!

CAUTION: SERVICE WORK SHOULD BE PERFORMED ONLY BY TRAINED & QUALIFIED PERSONNEL

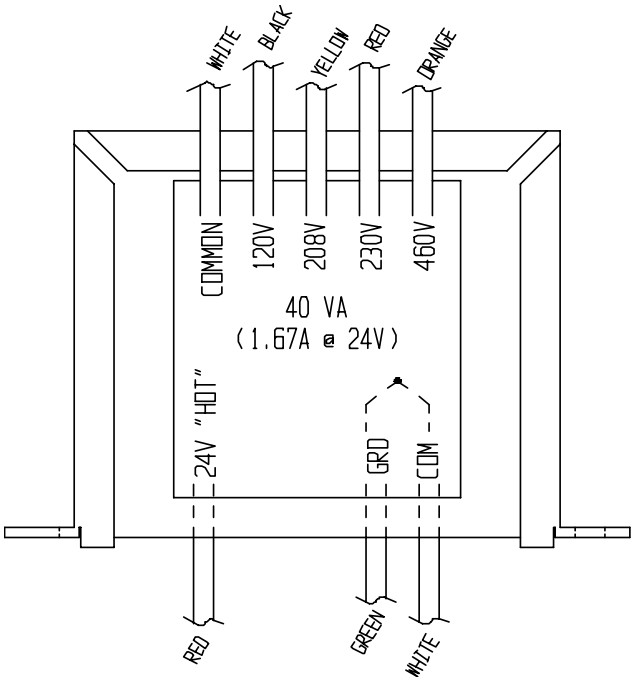

ELECTRICAL LADDER DIAGRAM -- HPC-400

- o Warning: Care should be taken to identify all potential hazards and comply with applicable safety procedures before beginning work. Verify that all system pressure and power have been removed before attempting to work on the electrical or hydraulic systems.
- o *Warning:* The platen must be fully lowered and the hydraulic pressure removed before working on the hydraulic system.
- o *Only qualified individuals trained to understand mechanical devices and their associated electrical and hydraulic circuits should attempt troubleshooting and repair of this equipment.*

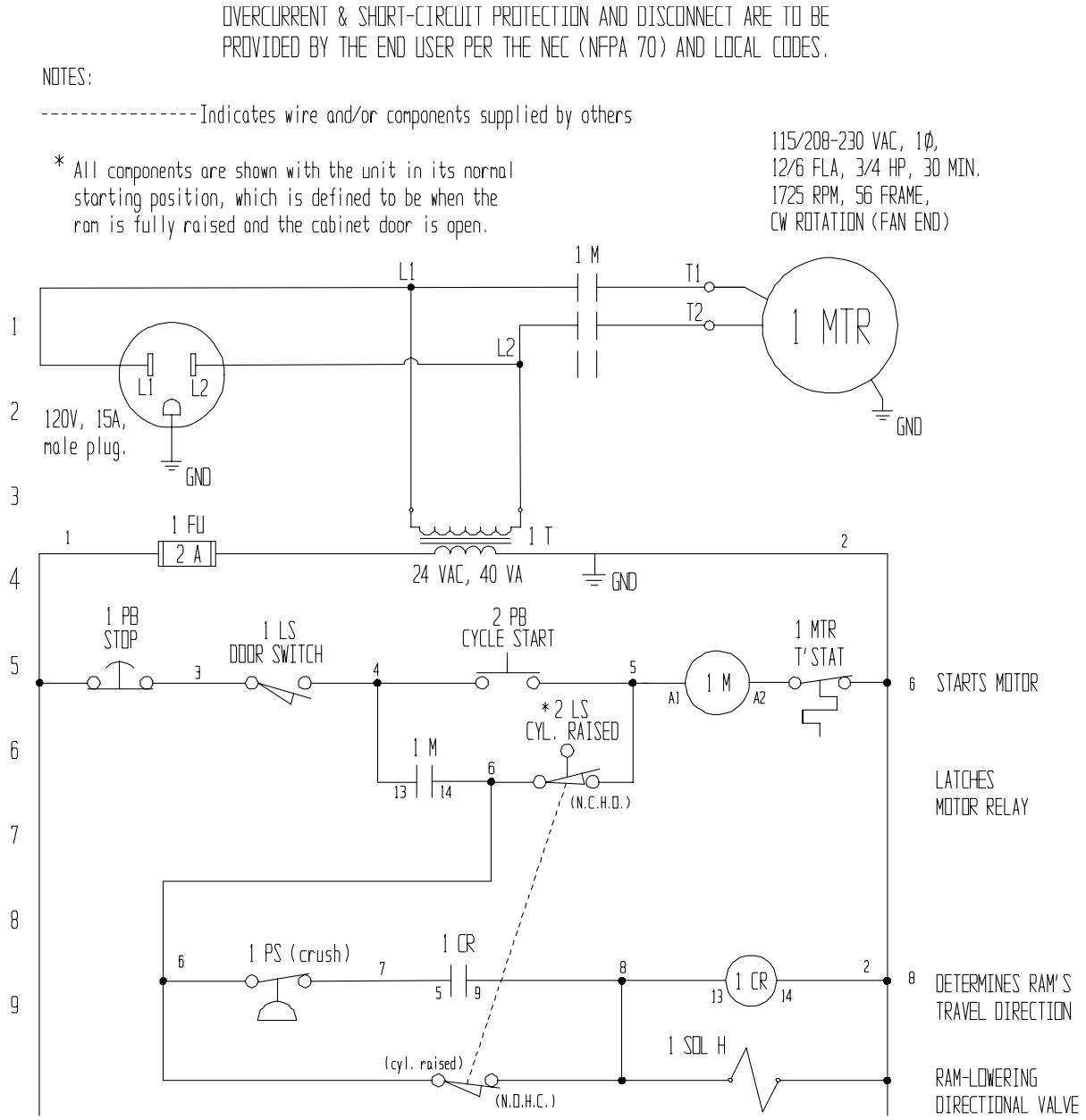

BE SURE ALL POWER IS OFF BEFORE ATTEMPTING TO WORK ON THIS EQUIPMENT!

CAUTION: SERVICE WORK SHOULD BE PERFORMED ONLY BY TRAINED & QUALIFIED PERSONNEL

ELECTRICAL INTERCONNECTION DIAGRAM -- HPC-400

- o Warning: Care should be taken to identify all potential hazards and comply with applicable safety procedures before beginning work. Verify that all system pressure and power have been removed before attempting to work on the electrical or hydraulic systems.
- o *Warning:* The platen must be fully lowered and the hydraulic pressure removed before working on the hydraulic system.
- o *Only qualified individuals trained to understand mechanical devices and their associated electrical and hydraulic circuits should attempt troubleshooting and repair of this equipment.*

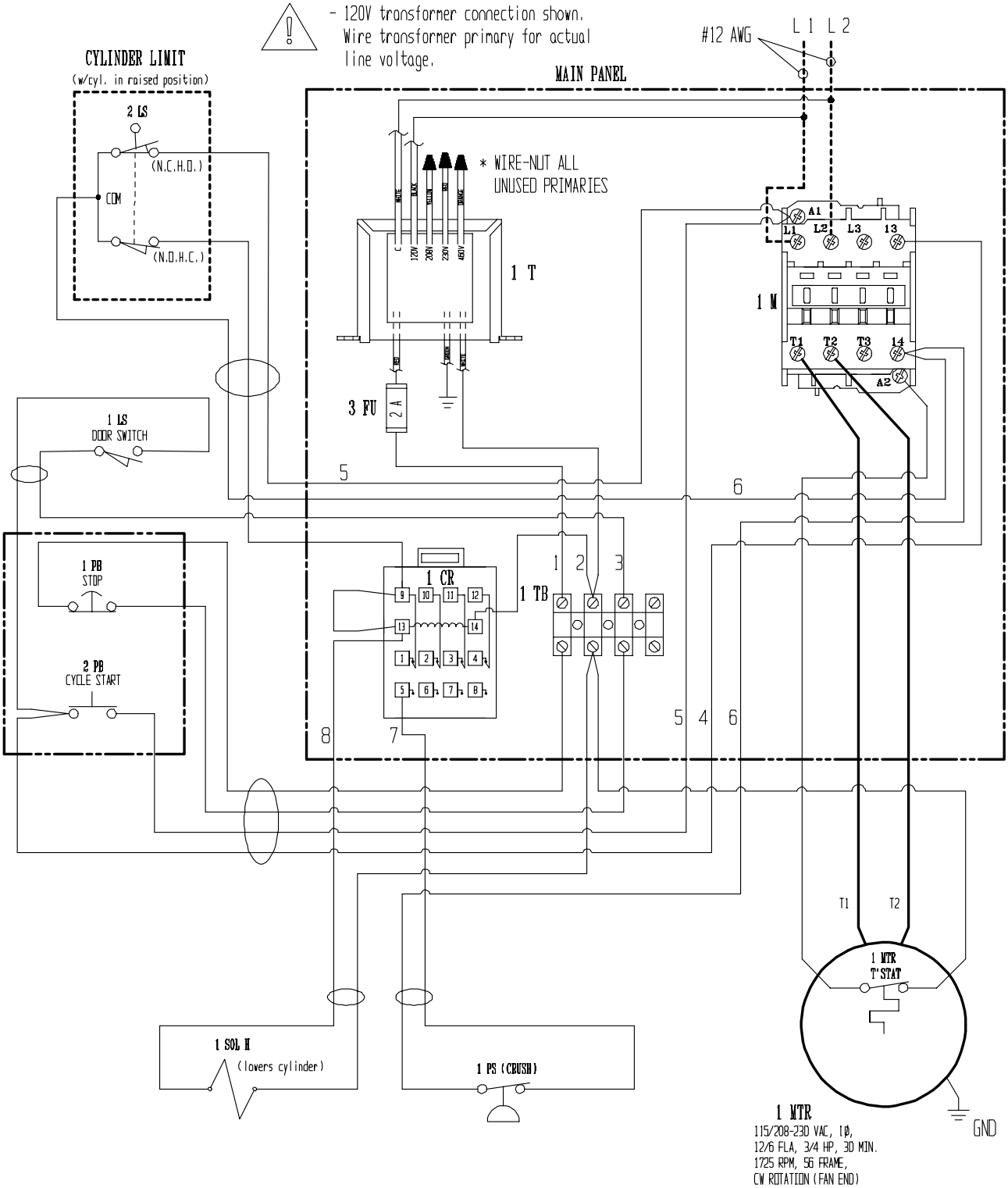

HYDRAULIC DIAGRAM – LIFT-HOLD-LOWER CIRCUITS

- *Warning: Care should be taken to identify all potential hazards and comply with applicable safety procedures before beginning work. Fully lower or secure the crushing platen, and verify that all system pressure and power have been removed, before attempting to work on the hydraulic system.*
- *Only qualified individuals trained to understand mechanical devices and their associated electrical and hydraulic circuits should attempt troubleshooting and repair of this equipment*
- *Caution: Do not use brake fluid or jack oils in the hydraulic system. If oil is needed, use an anti-wear hydraulic oil with a viscosity of 150 SUS at 100°F (ISO 32 @ 40°C), or non-synthetic transmission fluid.*

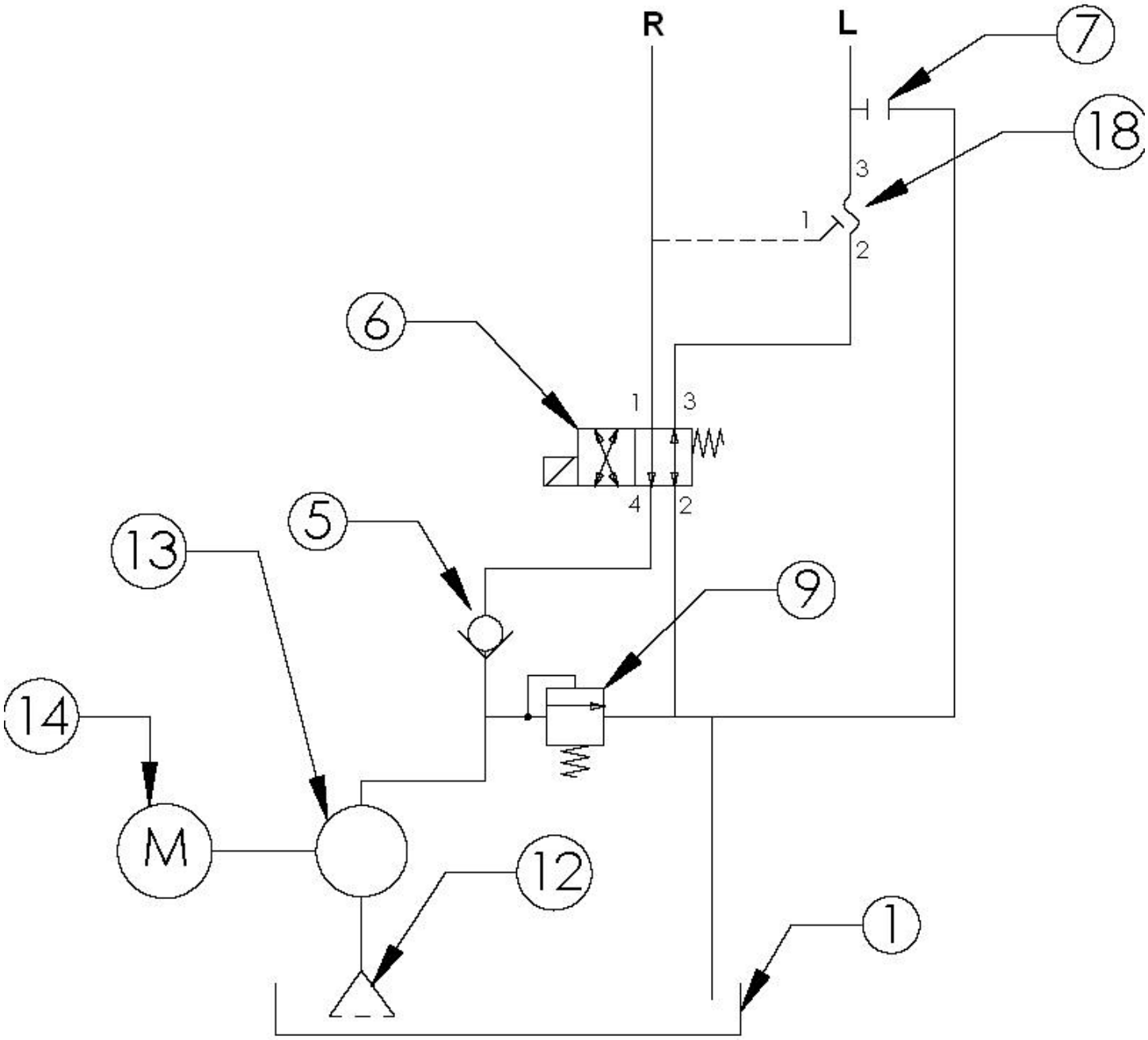

BILL OF MATERIALS -- HPC-400

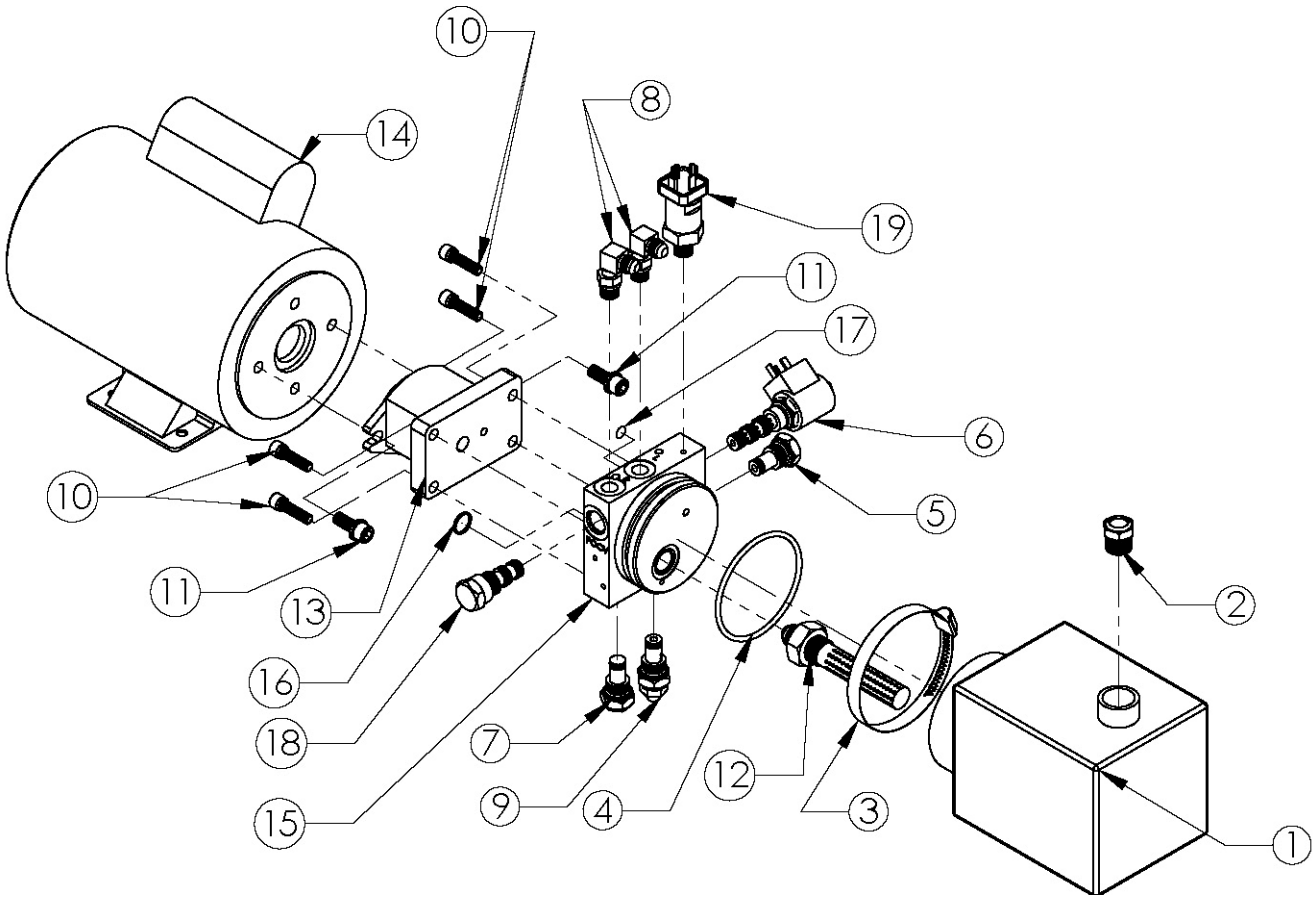

ELECTRIC / HYDRAULIC BOM -- HPC-400

Item #:	Description	Part number	Qty.
1	Reservoir	06-023-001	1
2	Plug, breather	BV-38	1
3	Clamp	HS64	1
4	O-ring	568-340	1
5	Valve, check	99-153-011	1
6	Valve, 4-way, 2-position directional	99-153-008	1
	Solenoid, 24VAC	99-034-008	1
7	Plug, cavity	CPO8-20-N	1
8	Fitting, hydraulic, 90°	6801-06-06N-WO	2
9	Valve, pressure relief	99-153-004	1
10	SHCS, 5/16” - 18 UNC x 1” long	23255	4
	Washer, lock, high collar, 5/16” ID	33687	4
11	SHCS, 3/8” - 16 UNC x 1” long	23305	2
	Washer, lock, high collar, 3/8” ID	33688	2
	Washer, flat, 3/8” ID	33008	2
12	Filter, hydraulic, 3/4” x 3 5/8” long, 20 mesh	01-031-005	1
13	Pump, hydraulic, .06 in^3/rev	01-143-905	1
14	Motor, electric, 3/4HP, 115V	99-135-003	1
15	Manifold, hydraulic	17-127-001	1
16	O-ring	568-015-BN70	1
17	O-ring	568-011-BN70	1
18	Plug, cavity (ports 2 to 3 open)	CP08-30-N-X	1
19	Switch, pressure, adjustable, 3000 psi	99-022-004	1

THE POWER UNIT'S OPERATION – HPC-400

The electric / hydraulic pail crusher utilizes an electric motor directly coupled to a gear-type hydraulic pump to produce the needed fluid pressure and flow to allow the cylinder to perform the work of crushing pail.

A hydraulic manifold houses the hydraulic control components, and is bolted directly onto the gear pump.

The power unit's hydraulic components are all rated for 3,000 psi working pressure.

Important parts of the power unit include:

- The electric motor. Available for all nominal voltages and phases of power supply.
- The gear pump. Its shaft is coupled directly to the shaft of the electric motor.
- The check valve. Its purpose is to prevent the backflow of fluid through the pump. When stopped before a cycle is completed, the crushing platen will hold its position.
- The pressure relief valve. Its job is to open a path for fluid to flow back to the reservoir in the event that the fluid pressure built up by the pump exceeds 3,000 psi.
- The solenoid-operated directional valve. This is an electrically-operated cartridge valve. It contains a screen to keep contaminants from entering the valve.
- The pressure-compensated flow control spool. This rests under the lowering valve, and regulates the fluid flow back to the reservoir when the valve opens. It allows the forks to always lower at the same rate regardless of whether there is a load on the fork carriage or not.
- The hydraulic cylinder. This is a double-acting cylinder.
- The hydraulic fluid. The system uses HO150 hydraulic fluid. Any anti-wear hydraulic fluid with a viscosity grade of 150 SUS at 100°F (ISO 32 @ 40°C) such as AW-32 or Dexron transmission fluid are acceptable.

When a pail is loaded and the cabinet door is closed, press the CYCLE START pushbutton. The motor turns, and in turning it spins the hydraulic gear pump. Hydraulic fluid is pumped through the check valve, through the energized directional valve, and to the cylinder, which extends to lower the crushing plate.

When the cylinder either strokes out or the pail is crushed completely, a pressure switch causes the directional valve solenoid to de-energize, the pilot-operated check valve in the hydraulic manifold opens, and the cylinder retracts to raise the crushing platen.

TROUBLESHOOTING GUIDE -- HPC-400

Warning: Always secure the platen by blocking it up or lower it fully, and disconnect the power supply, before opening the hydraulic system.

Consult the factory for problems at time of installation, or for any problems not addressed below.

Problem:	Possible cause(s):	Action:
Motor doesn't run when "CYCLE START" button is pressed.	Stop button is engaged.	Verify that the button operator is pulled completely outward. If so, test its contact block with an meter.
	Door switch is not engaged.	Verify that the door switch plunger is pushed in far enough to close the switch.
	No output from the transformer's secondary winding, or the in-line fuse is blown.	Test the fuse, and for 24VAC at the secondary winding; replace components if bad.
	No supply voltage.	Test for line voltage at the motor relay's line terminals.
	Bad connection in the control circuit.	Test all components and wiring with a meter.
	Open motor relay coil or motor thermostat.	Test with a meter; replace if bad. (Motor thermostat can be bypassed.)
Motor runs, but platen does not lower.	If three-phase, wrong motor rotation.	Verify motor rotates CCW when viewed from the shaft end.
	No pump output.	Check for fluid flow by loosening the hose fitting at the top end of the cylinder to check for fluid flow.
	Fluid level is low.	The fluid level should be within 1½" of the top of the reservoir when the platen is fully raised.
Motor hums noticeably or is otherwise noisy, but the platen does not move downward, or moves downward only slowly.	Supply voltage is too low.	Verify the supply voltage at the motor relay's load terminals while the motor is on. If voltage drop is 10% or more, install a properly sized dedicated supply circuit.
	Motor is "single-phasing" (three-phase motors only).	Verify that all phases are present. Determine cause of loss of voltage on one phase, and correct.
	Motor's start capacitor or centrifugal switch is open (single-phase motors only).	Test both components with a meter.
	Low fluid level in the reservoir.	Loosen the hose fitting at the top end of the cylinder to check for fluid flow.
Crushing platen cycles up and down a few inches rapidly when the "CYCLE START" button is pressed and held.	"Cylinder Raised" limit switch is staying engaged when the platen is fully raised.	Inspect for the cause of the hangup. Verify that the limit switch's arm and the switch's actuator bolt both move freely.
Crushing platen lowers, but only while the "CYCLE START" button is pressed.	Operator is not holding the button long enough.	Hold button down long enough for the platen to drop a couple of inches.
	The motor relay's auxiliary contact is dirty or is open.	Test with a meter. If defective, replace the relay.
Platen lowers, but won't return to the top.	The pressure switch setting is higher than the system pressure.	Place a pressure gauge in the hydraulic system to verify that the pump is developing adequate pressure (3,000 psi).
Pails are not crushing completely. Platen returns to the top.	The pressure switch setting is too low.	
Crushing platen drifts downward when the crusher is not being used.	System check valve is leaking.	Run the crushing platen down fully, then remove, inspect, clean, and replace the check valve (item #5).

SAFETY LABEL IDENTIFICATION

* Product safety signs or labels should be periodically inspected and cleaned by the product users as necessary to maintain good legibility for safe viewing distance -- ANSI 535.4 (10.21). Contact the manufacturer for replacement labels.

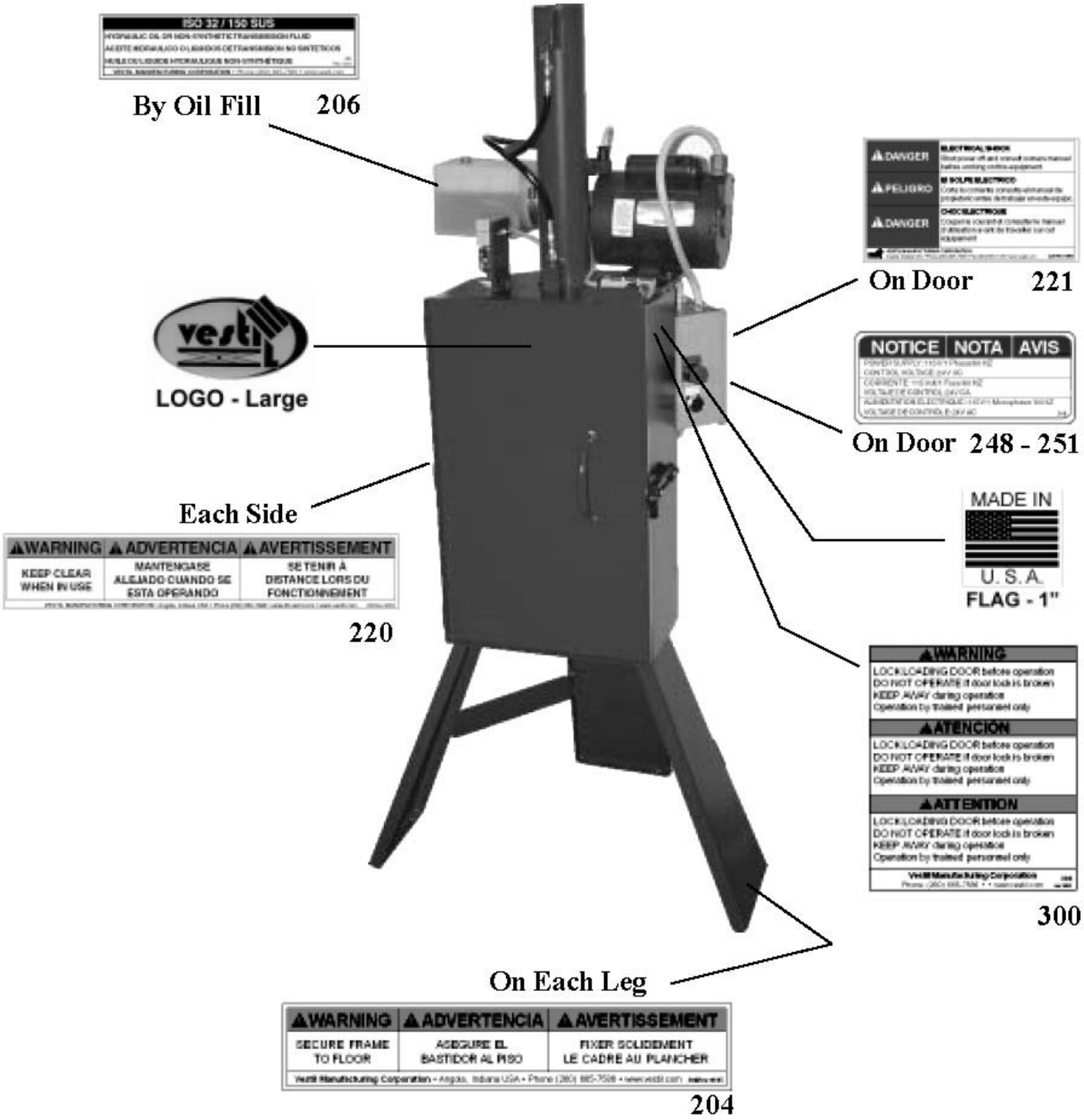

PRODUCT WARRANTY

ONE YEAR LIMITED WARRANTY

The manufacturer warrants for the original purchaser against defects in materials and workmanship under normal use for one year after date of shipment (not to exceed 15 months after date of manufacture). Any part that is determined by the manufacturer to be defective in material or workmanship and returned to the factory, shipping costs prepaid, will be, as the exclusive remedy, repaired or replaced at our option. Labor costs for warranty repairs and/or modifications are not covered unless pre-approved by the manufacturer or done at the manufacturer's facilities. Any modifications performed without prior written approval of the manufacturer may void warranty. This limited warranty gives purchaser specific legal rights which vary from state to state.

All specifications are subject to change without notice.

LIMITATION OF LIABILITY

To the extent allowable under applicable law, the manufacturer's liability for consequential and incidental damages is expressly disclaimed. The manufacturer's liability in any event is limited to, and shall not exceed, the purchase price paid. Misuse or modification may void warranty.

Warranty does not cover labor or consequential damages including, but not limited to, business interruption costs, lost profits, or lost business opportunities.

WARRANTY DISCLAIMER

The manufacturer has made a diligent effort to accurately illustrate and describe their products. However, such illustrations and descriptions are for the sole purpose of identification, and do not express or imply a warranty that the products are merchantable or fit for a particular purpose, or that the products will necessarily conform to the illustrations or descriptions.

The provisions of the warranty shall be construed and enforced in accordance with the Uniform Commercial Code and laws as enacted in the State of Indiana.

DISPOSITION

Our company will make a good faith effort for prompt correction or other adjustment with respect to any product that proves to be defective within the Limited Warranty Period. Warranty claims must be made in writing within said year.