MECHANICAL POST TABLE - MT-2460-LP

APPROX WEIGHT: 422.43 lbs.
DOES NOT INCLUDE WEIGHT OF POWER OR PACKAGING!!!

ANY ADDITIONS, DELETIONS, OR OMISSIONS MUST BE CORRECTED ON THIS DRAWING AS THIS DRAWING WILL BE CONSIDERED ALL INCLUSIVE

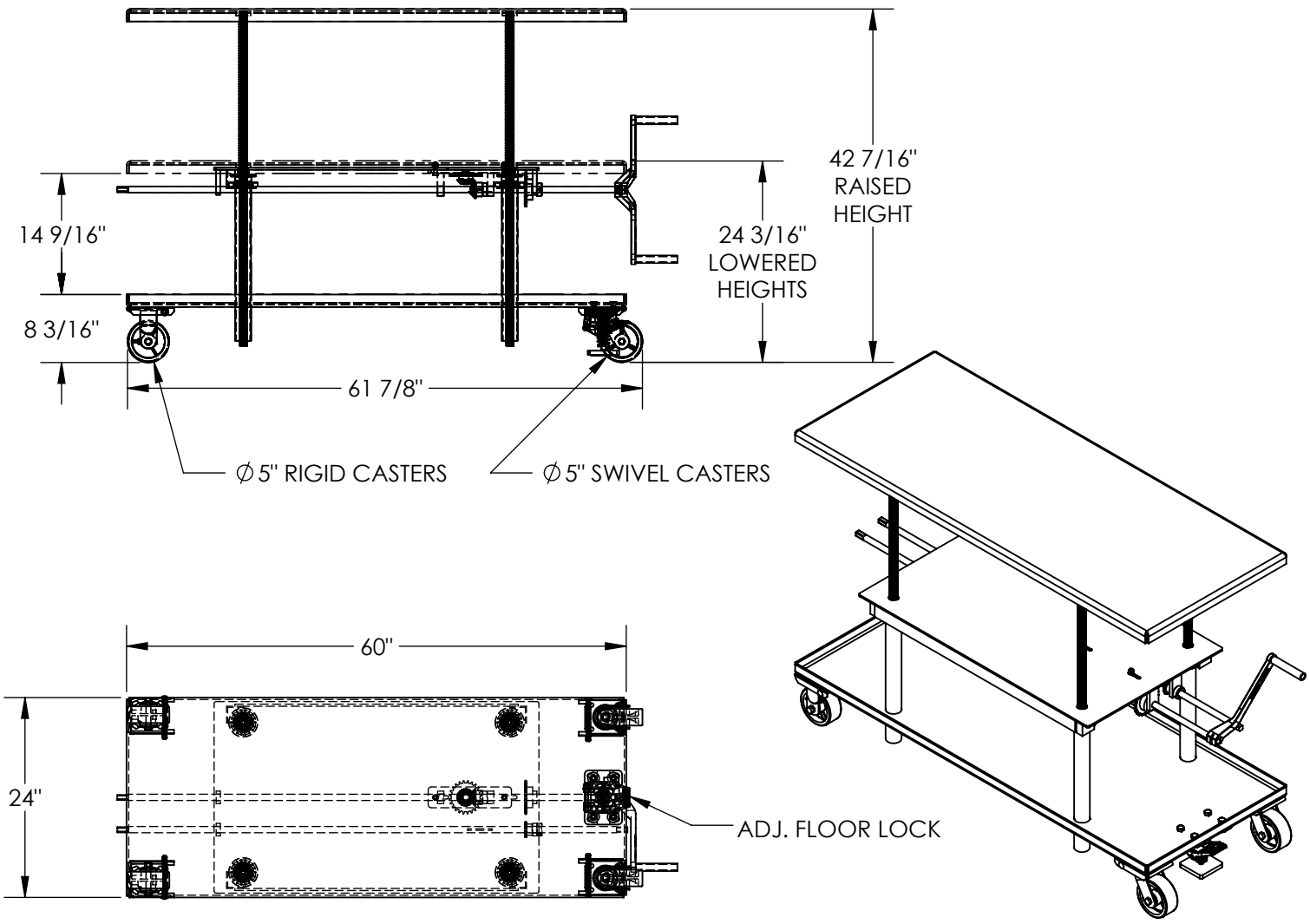

ALL GRAPHICS PROVIDED ARE FOR REFERENCE ONLY. IF CERTAIN DIMENSIONS ARE CRITICAL PLEASE VERIFY THOSE DIMENSIONS WITH YOUR SALESPERSON

DIMENSION TOLERANCE ± 1/4"

STANDARD FEATURES

MODEL NUMBER IS MT-2460-LP
CAPACITY: 2,000 LBS.
PLATFORM WIDTH : 24"
PLATFORM LENGTH: 60"
RAISED HEIGHT: 42 7/16"
LOWERED HEIGHT: 24 3/16"
LOW-PROFILE OPERATION
PRECISION SPROCKET/GEAR LIFTING MECH.
LOW SPEED IS 1/8" PER CRANK
HIGH SPEED IS 5/16" PER CRANK
(2) - 5 X 2 POLY ON STEEL SWIVEL CASTERS
(2) - 5 X 2 POLY ON STEEL RIGID CASTERS
INCLUDES FLOOR LOCK
DURABLE LIQUID PAINT BLUE FINISH

SPECIAL FEATURES

NONE

APPROVAL

I, THE UNDERSIGNED, AGREE THAT THE PRODUCT AS REPRESENTED SATISFIES DESIGN AND DIMENSION REQUIREMENTS. I ALSO ACKNOWLEDGE MY DUTY TO CONFIRM PRODUCT AND INSTALLATION COMPLIANCE WITH ALL APPLICABLE FEDERAL, STATE AND LOCAL REGULATIONS AND STANDARDS.

UNITS REQUIRING APPROVAL DRAWINGS OR MODIFIED ARE NON-RETURNABLE

[ ] As drawn [ ] As marked

Signed:_____ Date:_____

Printed Name:_____

LEAD TIME WILL START UPON RECEIPT OF SIGNED APPROVAL DRAWING

DISTRIBUTOR'S NAME: VESTIL MANUFACTURING		P.O.# X
		W.O.# X
DRAWN BY: DEY	DATE: 03/09/12	SALES: X
REFERENCE: X	SCALE: 1:20	FILE NAME: 21-007-088
QUOTED LEAD TIME: X	QUOTE # X	